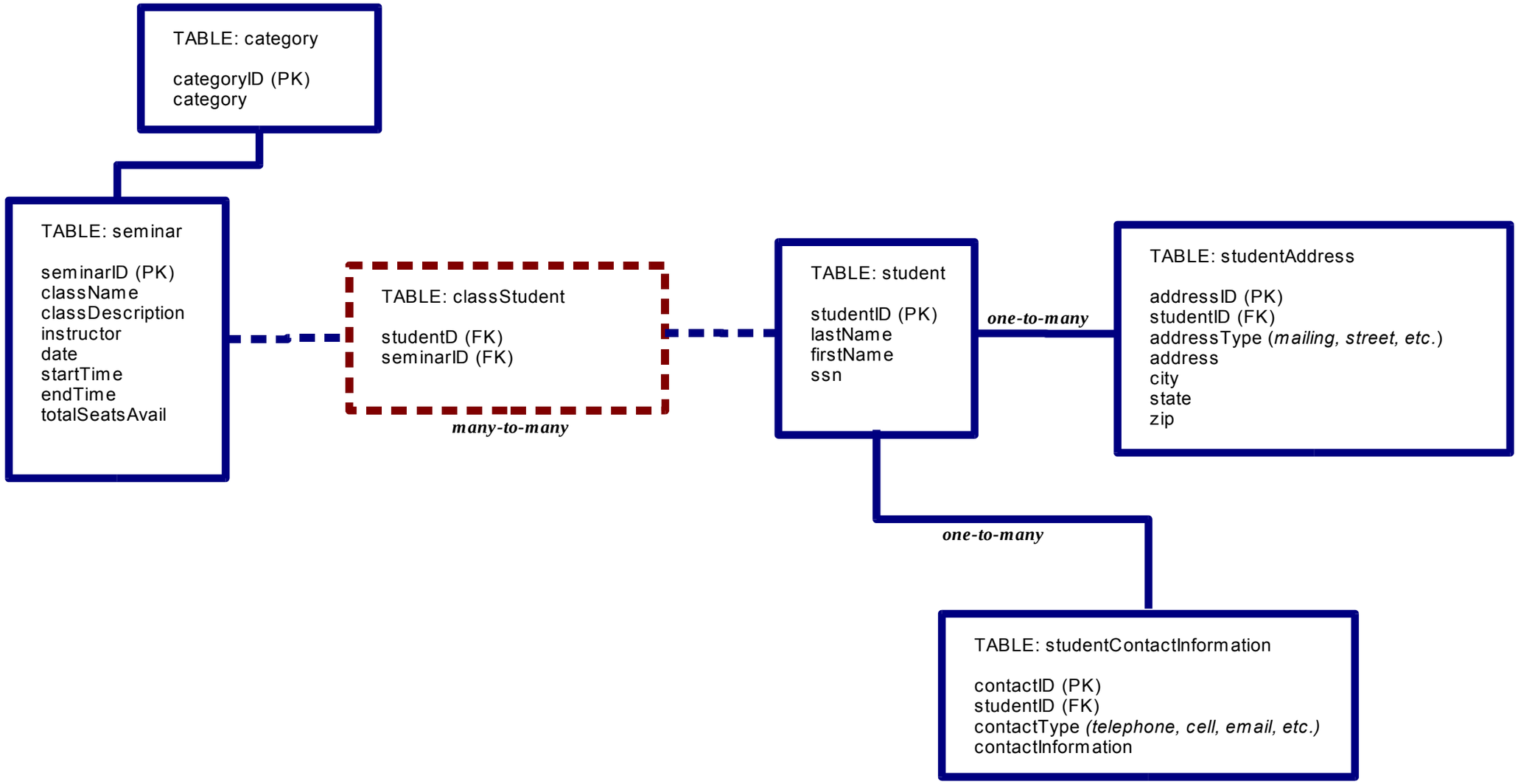

1NF (1st Normal Form)